CourtView 8
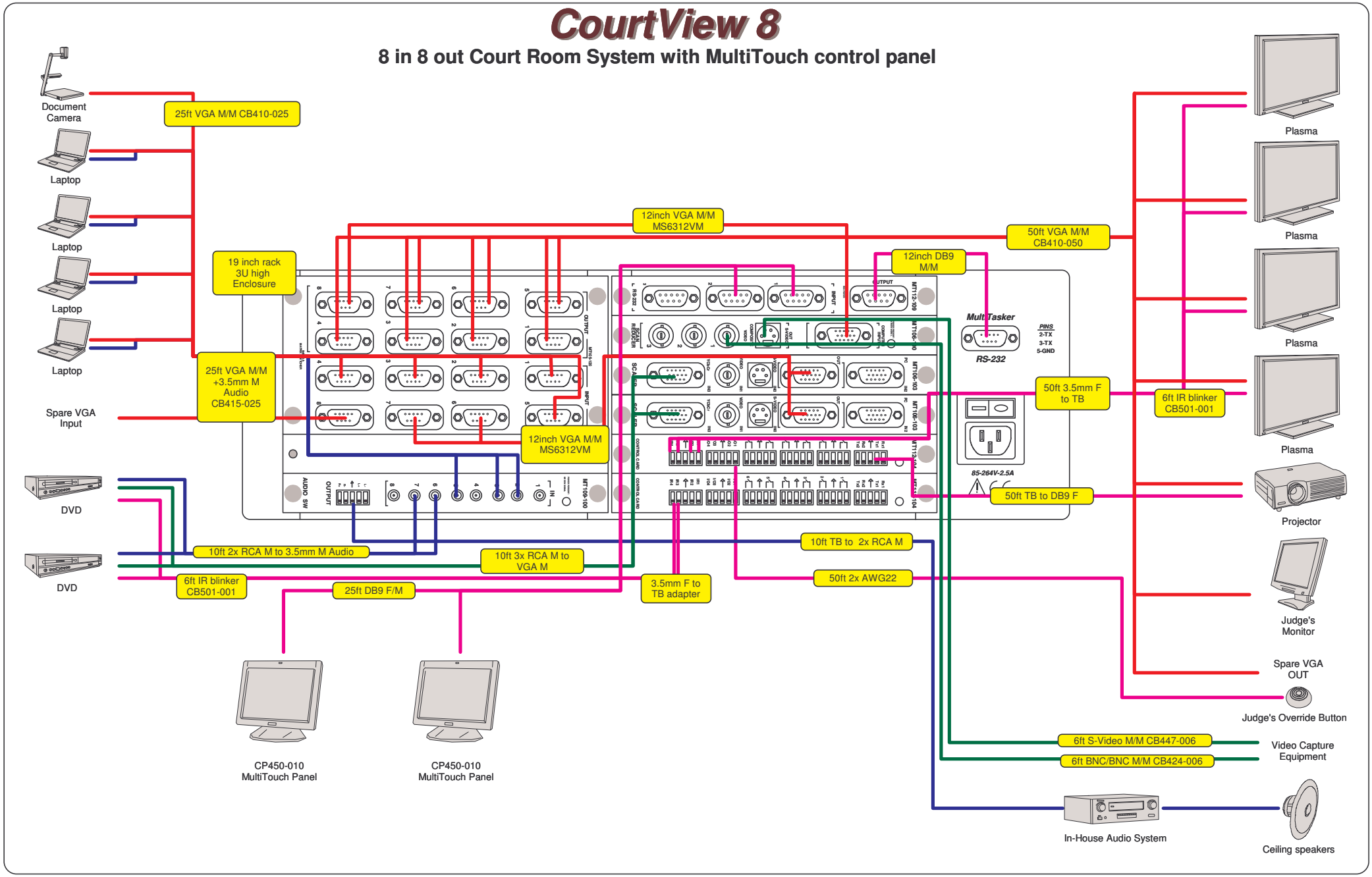
8 in 8 out Court Room System with MultiTouch control panel